3R1040T (30KVA)

REV	DESCRIPTION
0	NEW RELEASE

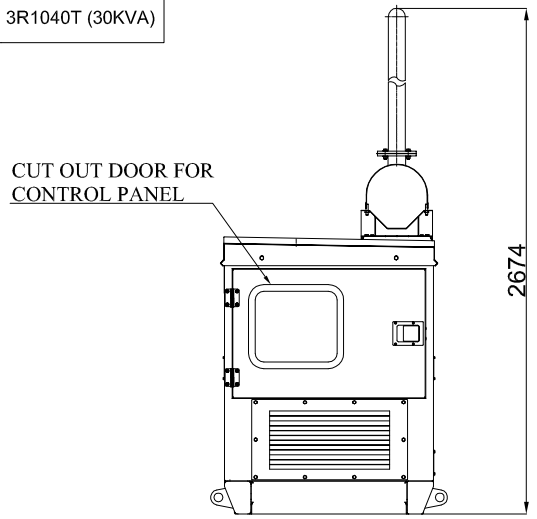

VIEW FROM ALTERNATOR

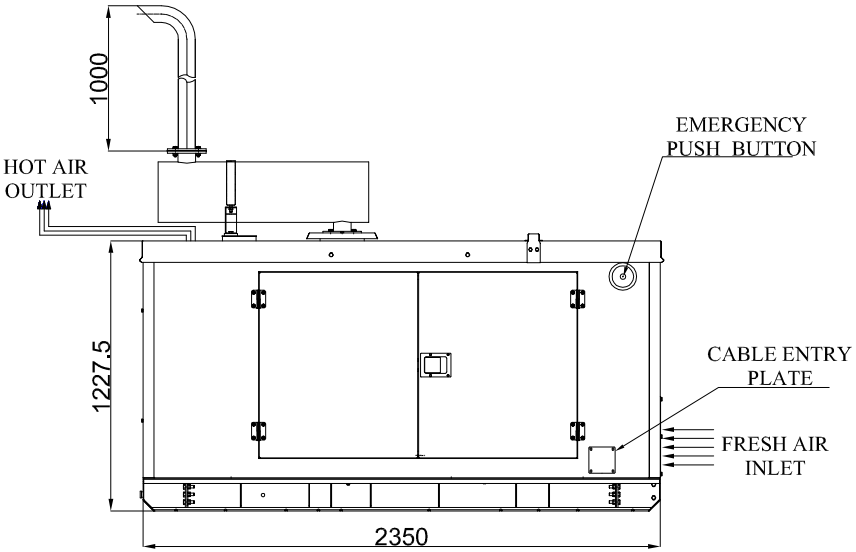

VIEW FROM FRONT

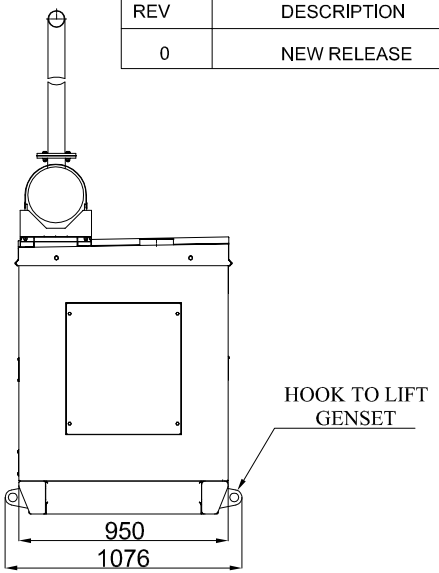

VIEW FROM GEAR SIDE

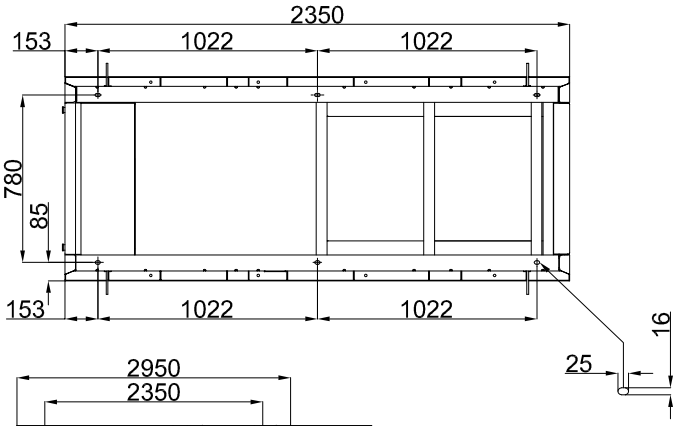

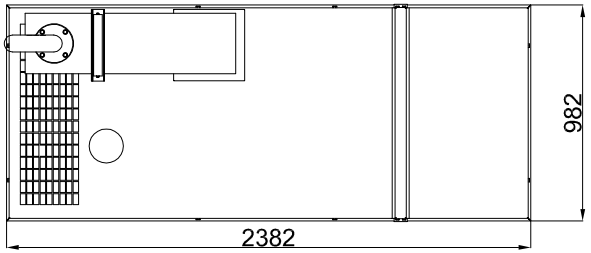

VIEW FROM TOP

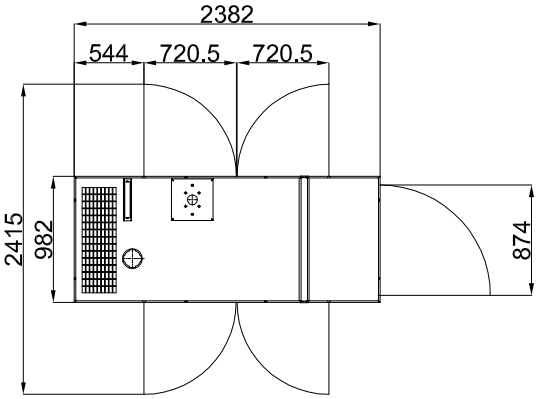

INSTALLATION PLAN FOR
OPEN DOOR

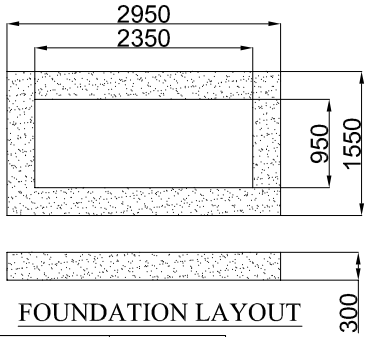

FOUNDATION LAYOUT

NOTES:

1. **FUEL TANK CAPACITY: 65 LITRES**
2. **HEIGHT OF FOUNDATION ABOVE FFL CAN BE MODIFIED DEPENDING UPON WATER STAGNATION.**
3. **DEPTH BELOW FFL DEPEND UPON THE SOIL CONDITION AT SITE**
4. **APPROX DEPTH BELOW FFL= 500MM**
5. **PCC OR RCC SHALL BE BASED ON SOIL CONDITION**
6. **HEIGHT OF GENSET = 2674 MM (8.77ft)**
7. **WIDTH OF GENSET = 950 MM (3.11ft)**

IF IN DOUBT ASK

PRINTS OF PREVIOUS REVISION NO. SHOULD BE SCRAPPED

THIS DRAWING IS PROPERTY OF SUNBEAM GENERATOR PVT LTD. AND MUST BE RETURNED ON REQUEST.IT IS SUBMITTED AS CONFIDENTIAL INFORMATION WITH OUR ENQUIRY, TENDER, ORDER OR CONTRACT NO. IT IS NOT TO BE ISSUED FOR ANY OTHER PURPOSE OR ORDER NOR MAY BE COPIED OR LENT WITHOUT OUR AUTHORITY IN WRITING.

LIFECYCLE STATE:- RELEASED

No.	REVISION	ZONE	MODIFIED BY	REF. No. DATE

UNLESS OTHERWISE SPECIFIED
- ALL DIMENSIONS ARE IN mm. SURFACE ROUGHNESS AS PER CO. STANDARDS.
- UNMENTIONED TOLERANCES AS PER CO.STANDARDS.
- REMOVE ALL SHARP BURRS AND SHARP EDGES.
- DRAWING NOT TO BE SCALED.

UNMENTIONED
RADII --
CHAMFER --
UNDERCUT --

CAD DRG. FILE:- PLM
MATERIAL :- --
HEAT TREATMENT :- --
WEIGHT (kg) :- --
DRN D.PRAKASH
CHD. T.M.ARUNKUMAR
APPD.
DATE 05.07.2014

TITLE 3R1040T GENSET LAYOUT 30 KVA

CASTING/FORGING DRG. NO.
TYPE 3R1040T
SCALE
SHT. NO 1 OF 1

SUNBEAM GENERATOR PVT.LTD PONDICHERRY

DRAWING NO. SBG/GA-FND-30KVA
REV. NO. 01

SIZE A1